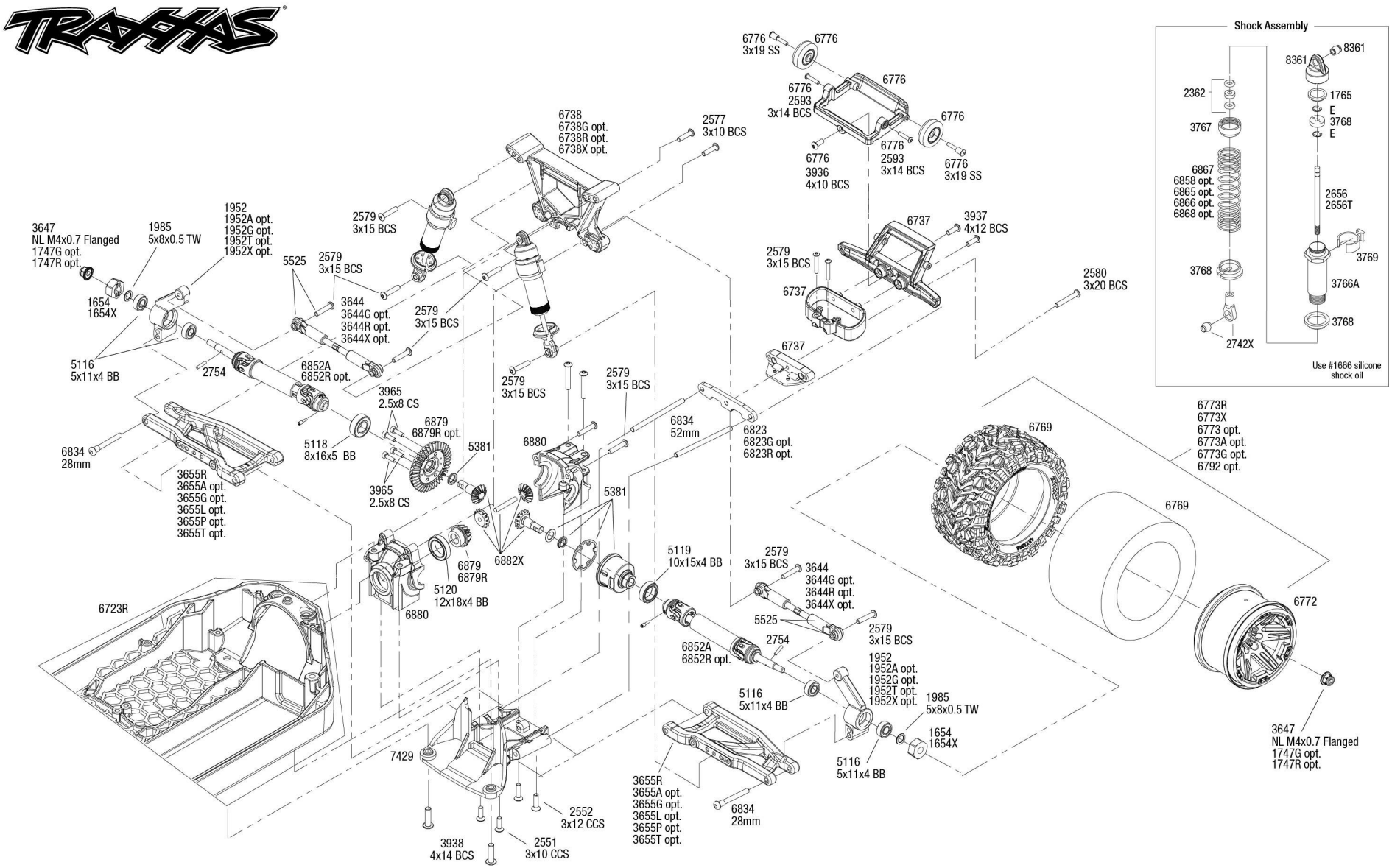

RUSTLER 4X4 VXL BRUSHLESS

Rear Assembly

See Parts List for a complete listing of optional accessories.

REV 200922-R17

Specifications on this page are subject to change without notice. Every attempt has been made to ensure the accuracy of this drawing; however, Traxxas cannot be held responsible for typographical or other errors.